Count drawing's modified record with customer

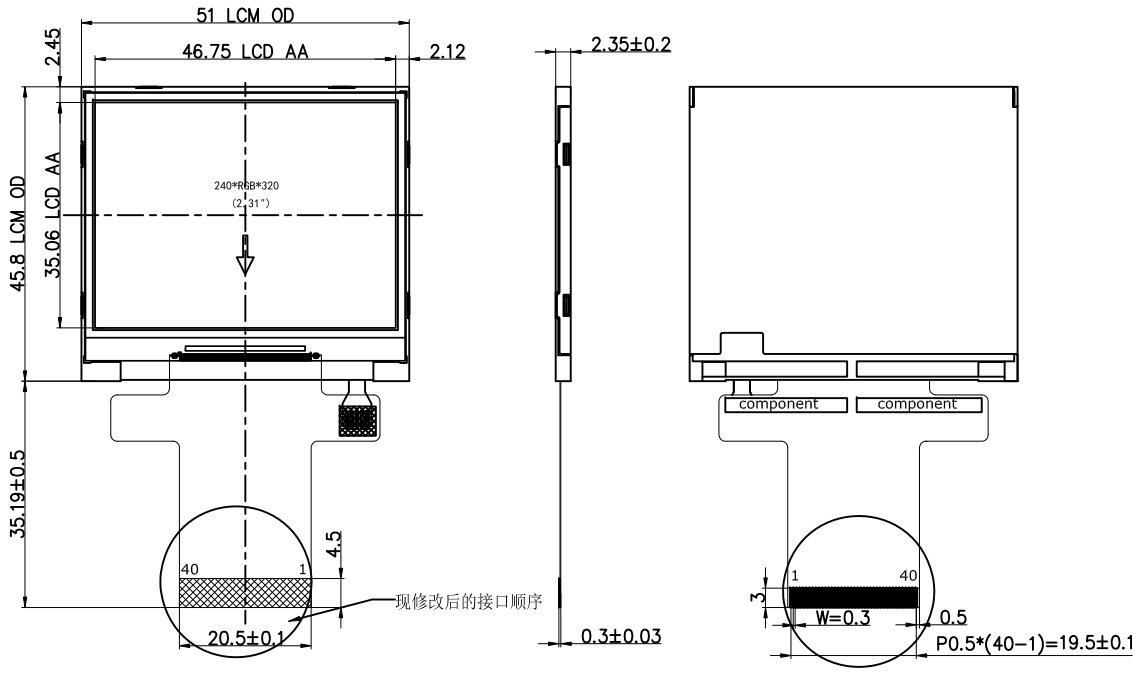

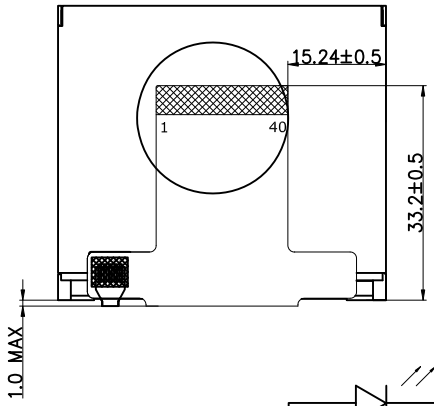

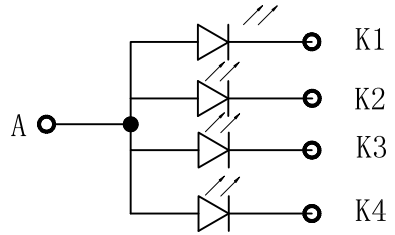

LED CIRCUIT DIAGRAM

No.	Symbol
1	LEDK1
2	LEDK2
3	LEDK3
4	LEDK4
5	LED A
6	IM0
7	IM1
8	IM2
9	IM3
10	RESET
11	VSYNC
12	HSYNC
13	DOTCLK
14	ENABLE
15	DB17
16	DB16
17	DB15
18	DB14
19	DB13
20	DB12
21	DB11
22	DB10
23	DB09
24	DB08
25	DB07
26	DB06
27	DB05
28	DB04
29	DB03
30	DB02
31	DB01
32	DB00
33	GND
34	SDI
35	RD
36	WR
37	RS
38	CS
39	FMARK
40	VCI/IOVCC=2.8V

IM3	IM2	IM1	IM0	PIN USE
0	1	0	0	8 BIT (DB00-DB07)
0	1	1	0	16 BIT (DB00-DB15)
0	1	0	1	9 BIT (DB00-DB08)
0	1	1	1	18BIT (DB00-DB17)
1	1	0	1	3-SPI 9 BIT
1	1	1	1	4-SPI 8 BIT

NOTES:

1. DISPLAY MODE:2.3″ TFT LCD, Transmissive
2. DRIVER IC:ILI9342C
3. VIEWING DIRECTION:12
4. BACKLIGHT:4 CHIP-WHITE LED,IF=80mA,VF=3.2V
   BRIGHTNESS=200 CD/M2。
5. OPERATING TEMPERATURE:-20℃ TO 70℃
   STORAGE TEMPERATURE:-30℃ TO 80℃
6. GENERAL TOLERANCE:±0.20

TOLERANCE		SCALE	N.T.S
.X	±	UNITS	mm
.XX	±	MATERIAL	
∠	± 1°		

HONSEAN

深圳市弘盛智能显示科技有限公司
SHENZHEN HONSEAN SMART DISPLAY TECHNOLOGY CO.,LTD

DRG DATE		MODEL:	GH023HI40T01N
DRG BY	Welly	TITLE:	Page 1 OF 1
APPROVED	jan	P/N	VER. 01